protec controls
Email: Sales@Proteccontrols.com
Phone: 262-989-9894
Fax: 630-225-5070

Your #1 source for expert support and assistance with your project

Categories

- NEW UL 325 2016
- Full Hysecurity Parts List
- Full OSCO/Linear Parts List
- Hysecurity Parts->
- Access Control->
- Card Readers->
- Door Products->
- Gate Operator Parts->
- Gate Operators->
- Gate Parts
- Gooseneck Stands
- Keypads->
- Keyswitches->
- Loop Detectors->
- Loop Supplies & Sealant
- Magnetic Locks->
- Photobeams
- Preformed Loops->
- Presence & Motion Sensors
- Push Buttons->
  - Ceiling Pull
  - Corrosion Resist
  - Explosion Proof
  - Exterior Surface
  - Flush Mount
  - Interior
  - Replacement Buttons
- Push Plates->
- Radio Controls->
- Safety Edges
- Surge Protectors
- Telephone Entry->
- Timers
- Tools->
- Traffic Signals
- Treadle Switches
- Vehicle Probes
- Warning Devices->

Manufacturers

Please Select

Quick Find

Use keywords to find the product you are looking for.
Advanced Search

Information

- Shipping & Returns
- Privacy Notice
- Conditions of Use
- Contact Us

PBT-3 Open/Close/Stop Exterior Control Station (Metal)

[MMT PBT-3]

$54.75

Reviews

Add to Cart

PBT-3 NEMA-4 Open / Close / Stop Control Station

-Momentary Contact
-Dimensions: H=6", W=2-3/4", D=3-1/2"
-Normally Closed Contact on Stop
-NEMA 4

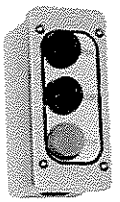

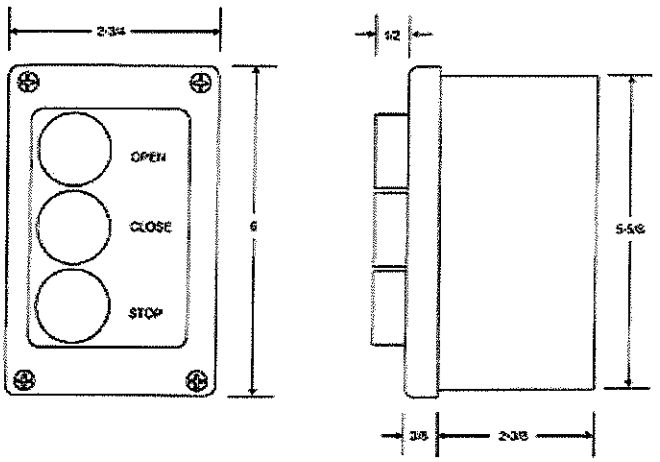

WIRING:

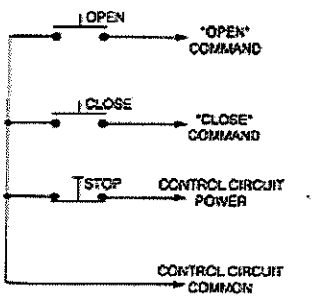

PBT-3 EXTERIOR CONTROL STATION

Fully Guarded Three Button Control
(Open-Close-Stop)
Exterior Surface Aluminum Die Cast Enclosure
NEMA 3R, 4, 12

Button: 6 amp @ 125/250 VAC
Open: Normally Open
Close: Normally Open
Stop: Normally Closed

Shopping Cart

0 items

What's New?

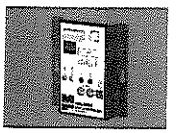

Miller Edge MGL-RX20 MGL Receiver
$125.00

Notifications

Notify me of updates to PBT-3 Open/Close/Stop Exterior Control Station (Metal)

Share Product

G+ Share